PA AMPLIFIER

User's Manual

NEW TA-SERIES

NF03299-1.0

TECHNICAL SPECIFICATION

MODEL	TA-1061/1121/3121 SERIES
RATED OUTPUT POWER	TA1061:60W TA1121/3121:120W
POWER INPUT	AC: 110-120V 50/60Hz AC: 220-240V 50/60Hz
POWER CONSUMPTION	TA1061:100W(RMS) TA1121/3121:180W(RMS)
FREQUENCY RESPONSE	60Hz~18kHz(±3dB)
INPUT IMPEDANCE /SENSITIVITY	AUX: −15dB(UNBAL) CD: −6dB(UNBAL) MIC: −50dB(BAL/UNBAL) LINE: −15dB(BAL/UNBAL)
TONE CONTROL	BASS: ±10dBV(100Hz) TREBLE: ±10dBV(10kHz)
DISTORTION (T.H.D)	＜0.5%
S/N RATIO	AUX≧75dB MIC≧65dB LINE≧65dB
CONTROLLING KEY	INPUT1 LEVEL CONTROL INPUT2 LEVEL CONTROL INPUT3 LEVEL CONTROL INPUT4 LEVEL CONTROL AUX LEVEL CONTROL TONE CONTROL (BASS, TREBLE) MASTER CONTROL AC SWITCH INPUT1 MUTE ADJUST
OUTPUT IMPEDANCE	COM, 8Ω
LINE OUTPUT	COM, 70V, 100V
VU-METER (LED)	YES
INPUT1 PRIORITY	YES
MULTIFUNCTIONAL PLAY MODULE	MP3 300(TA-3121)
DIMENSION	430mm×262mm×88mm

Note: we reserve the right to modify the specification, design and appearance without additional notification.

SAFETY RELATED SYMBOLS

The symbol is used to indicate that some hazardous live terminals are involved within this apparatus, even under the normal operating conditions.

The symbol is used in the service documentation to indicate that specific component shall be only replaced by the component specified in that documentation for safety reasons.

⏚ Protective grounding terminal.

~ Alternating current /voltage.

ϟ Hazardous live terminal .

ON: Denotes the apparatus turns on.

OFF: Denotes the apparatus turns off, because of using the single pole switch, be sure to unplug the AC power to prevent any electric shock before you proceed your service.

WARNING: Describes precautions that should be observed to prevent the danger of injury or death to the user.

Disposing of this product should not be placed in municipal waste and should be separate collection.

CAUTION: Describes precautions that should be observed to prevent danger of the apparatus.

WARNING

- **Power Supply**

  Ensure the source voltage matches the voltage of the power supply before turning ON the apparatus.

  Unplug this apparatus during lightning storms or when unused for long periods of time.

- **External Connection**

  The external wiring connected to the output hazardous live terminals requires installation by an instructed person, or the use of ready-made leads or cords.

- **Do not Remove any Cover**

  There are maybe some areas with high voltages inside, to reduce the risk of electric shock, do not remove any cover if the power supply is connected.

  The cover should be removed by the qualified personnel only.

  No user serviceable parts inside.

- **Fuse**

  To prevent a fire, make sure to use fuses with specified standard (current, voltage, type). Do not use a different fuse or short circuit the fuse holder.

  Before replacing the fuse, turn OFF the apparatus and disconnected the power source.

- **Protective Grounding**

  Make sure to connect the protective grounding to prevent any electric shock before turning ON the apparatus.

  Never cut off the internal or external protective grounding wire or disconnect the wiring of protective grounding terminal.

- **Operating Conditions**

  This apparatus shall not be exposed to dripping or splashing and that no objects filled with liquids, such as vases, shall be placed on this apparatus.

To reduce the risk of fire or electric shock, do not expose this apparatus to rain or moisture.

Do not use this apparatus near water.

Install in accordance with the manufacturer's instructions. Do not install near any heat sources such as radiators, heat registers, stoves, or other apparatus (including amplifiers) that produce heat. Do not block any ventilation openings.

No naked flame sources, such as lighted candles, should be placed on the apparatus.

IMPORTANT SAFETY INSTRUCTIONS

- Read these instructions.
- Follow all instructions.
- Keep these instructions.
- Heed all warnings.
- Only use attachments/accessories specified by the manufacturer.

- **Power Cord and Plug**

Do not defeat the safety purpose of the polarized or grounding type plug.

A polarized plug has two blades with one wider than the other. A grounding type plug has two blades and a third grounding prong. The wide blade or the third prong are provided for your safety. If the provided plug does not fit into your outlet, consult an electrician for replacement of the obsolete outlet.

Protect the power cord from being walked on or pinched particularly at plugs, convenience receptacles, and the point where they exit from the apparatus.

- **Cleaning**

When the apparatus needs a cleaning, you can blow off dust from the apparatus with a blower or clean with rag etc.

Don't use solvents such as benzol, alcohol, or other fluids with very strong volatility and flammability for cleaning the apparatus body. Clean only with dry cloth.

- **Servicing**

Refer all servicing to qualified personnel. To reduce the risk of electric shock, do not perform any servicing other than that contained in the operating instructions unless you are qualified to do so .

Servicing is required when the apparatus has been damaged in any way ,such as power supply cord or plug is damaged , liquid has been spilled or objects have fallen into the apparatus, the apparatus has been exposed to rain or moisture, does not operate normally, or has been dropped.

⑰ & ⑱ connection

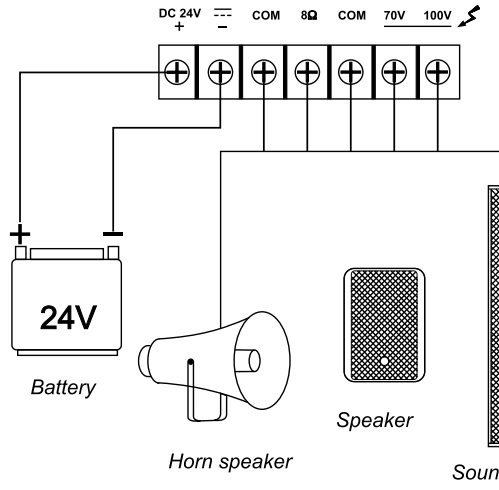

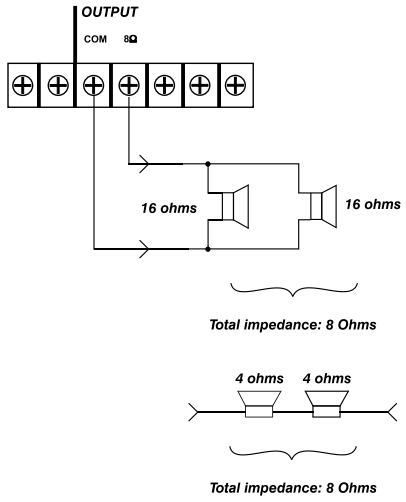

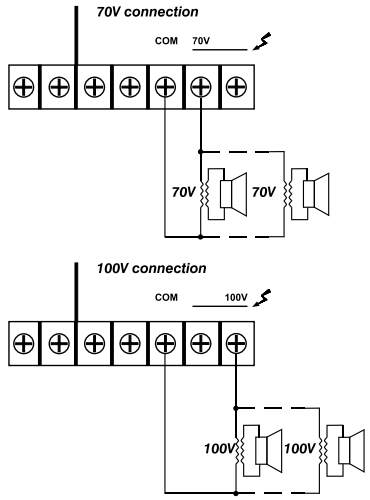

⑲ **AC INLET**

This connector is meant for connection of the supplied main cord. Do not insert the power cord into this unit until voltage has been correctly set

⑳ **POWER SELECT SWITCHES**

There are two voltages to choose :115V/230V

⑩ PRIORITY CONTROL

This knob can control the signals that be muted output level only for input1; according to adjust this knob, it can control the priority level of the input1; when you turned the knob to the left; and input the music from the others inputs, at the same time , insert the microphone from input1anc talk, you will can not hear the music, while you stop talking, the music come back, this is the priority function.

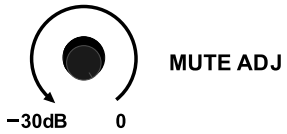

⑪ INPUT JACKS (COMBO JACK)

They are used for both balanced and unbalanced inputs. as following:

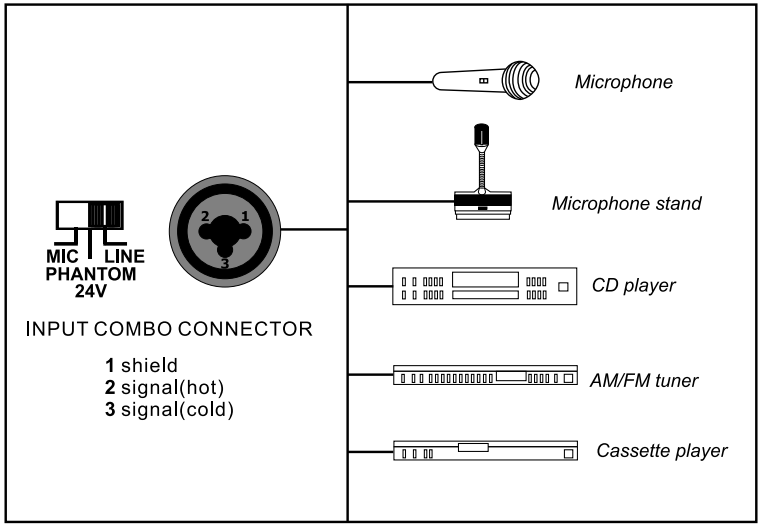

MP3 300 INSTRUCTION

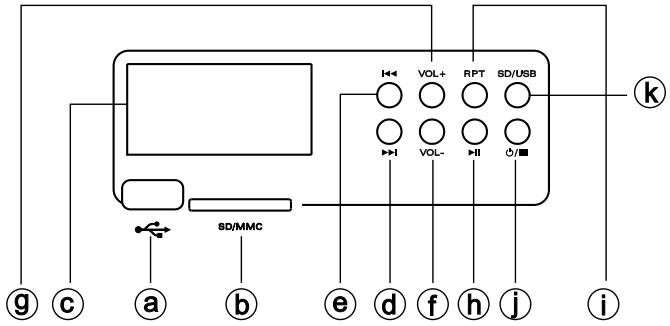

ⓐ	USB CONNECTOR	Insert USB player
ⓑ	SD/MMC CARD CONNECTOR	Insert SD/MMC Card
ⓒ	DISPLAY	Display the status when USB play
ⓓ	▶▶I	Play the next program
ⓔ	I◀◀	Play the last program
ⓕ	VOL-	Press this key the sound level is att.
ⓖ	VOL+	Press this key the sound level is increased
ⓗ	▶II	Press this key it start to play
ⓘ	RPT	Press this key repeat the program
ⓙ	⏻/■	Press this key it switches the power or stop the program
ⓚ	SD/USB	Press this key to select the SD Card or USB Player

THE REAR PANEL

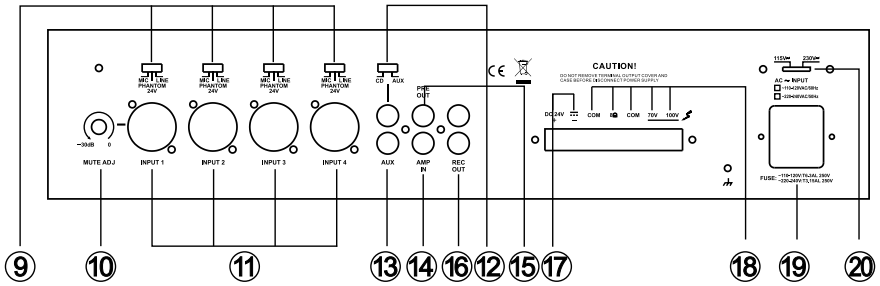

⑨ **MODE SWITCH**
When it is turned to left for MIC, middle for PHANTOM, right for LINE

⑩ **PRIORITY CONTROL**
This knob can control the signals that be muted output level

⑪ **INPUT JACKS (COMBO JACK)**
They are used for both balanced and unbalanced inputs.

⑫ **CD/AUX SWITCHES**
When it is AUX, the low signal is present; it is CD, the high signal is present.

⑬ **AUX IN**
It is used for sound resource from high output level.

⑭ **AMP IN**
It is used with other preamp

⑮ **PRE OUT**
It is used with other power amp

⑯ **RECORD OUT**
It is connected to tape recorder

⑰ **DC INPUT TERMINAL**
It is used for dc power supply for 24V, you should pay attention to the polarity

⑱ **OUTPUT IMPEDANCE**
There are 8 Ω, 70 V, 100 V for choice

⑲ **AC INLET**
This connector is meant for connection of the supplied main cord. Do not insert the power cord into this unit until voltage has been correctly set

⑳ **POWER SELECT SWITCHES**
There are two voltages to choose :115V/230V

OPERATION

① **POWER & SIGNAL LEDS**
The first led illuminates when the unit is switched on. When the signal outputs; the others leds illuminates; and if the output signals is over the output power, the lasted two red led illuminates

② **POWER SWITCH**
connect the power, when the button is " ▂ " , it means the power is on; when the button is " ▁ " , it means the power is off.

④ **INPUT VOLUME CONTROL**
when you adjust one of the sound volume for inputs; you should make the other volume control are at " 0 " ; so that it can offer the best sounds for you. Remember, if you want lower level, you should turn the knob to the left; otherwise, turn to the right .

⑤ **AUX INPUT VOLUME**
This knob to adjust the level for the aux input ; the way for adjust is the same as MIC. Input level control.

⑥ **BASS CONTROL**
This knob is used to attenuate or boost a low frequency of 100 Hz by +/- 10 dB; generally, it is set at middle;

⑦ **TREBLE CONTROL**
This knob is used to attenuate or boost a high frequency of 10 k Hz by +/- 10 dB; generally, it is set at middle;

⑧ **MASTER CONTROL**
This knob is used to control main power. All inputs are controled By it.
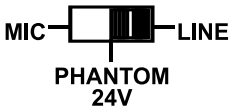
⑨ **MODE SWITCH**
These switch are used for input select; When it is turned to left for MIC, it is allowed the dynamic microphone inputs; when it is turned to the middle for PHANTOM, it is allowed the capacitance microphone inputs; when it is turned to the right for LINE; it allows the line high level signal source to input, such as cd, tuner ext.